RELAY REPLACEMENT PROCEDURE –
GPN2010V, GPN2012V, GPN2213V and GPN2214V PANELS

1. Turn the panel power **OFF**
2. Open the panel door and identify the CONTROL and FAULT relays as shown in **Figure 1**
3. Push the black thumb latch located on the relay carrier to the right. There will be an audible "click" when it shifts to the right and it will lift the relay cartridge from its seat in the carrier.
4. Remove the relay cartridge and destroy/discard.
5. Insert the blue solid state relay into the carrier seat. **Note the lead pattern on the bottom of the relay (Figure IV). The relay must be oriented so that this pattern matches up to the pattern in the carrier.** Also note that it has one less pin than the relay that you just removed **(Figure IV)**.
6. Press straight down firmly on the relay cartridge body. When it is seated, the black thumb latch will automatically move to the left to secure the cartridge in place.
7. Repeat the procedure for the second relay change.
8. **DO NOT REPLACE THE THIRD RELAY!!**
9. The replacement procedure is now complete **(Figure V)**. Operation of the panel is exactly as it has always been **EXCEPT** for use of second contacts on FAULT relay that were available for use as a FAULT output alarm. Refer to explanation on following page for further information on this feature.

Figure I – GPN2000 Series

Figure II – Fault and Control Relay Location

Figure III - Relay Removal

Figure V – Completed Relay Change

Current Relay | **Replacement Solid-State Relay**

Figure IV – Electro-Mechanical vs. Solid State Relay

IMPORTANT

The electromechanical relays being replaced under this notice contained a second set of contacts that are not present in the new solid state relay. These contacts are shown in the grey box in **Figure VI**. The purpose of these contacts was to allow for the use of a remote alarm/warning when the FAULT relay tripped. With the new solid state relay, this feature is no longer available.

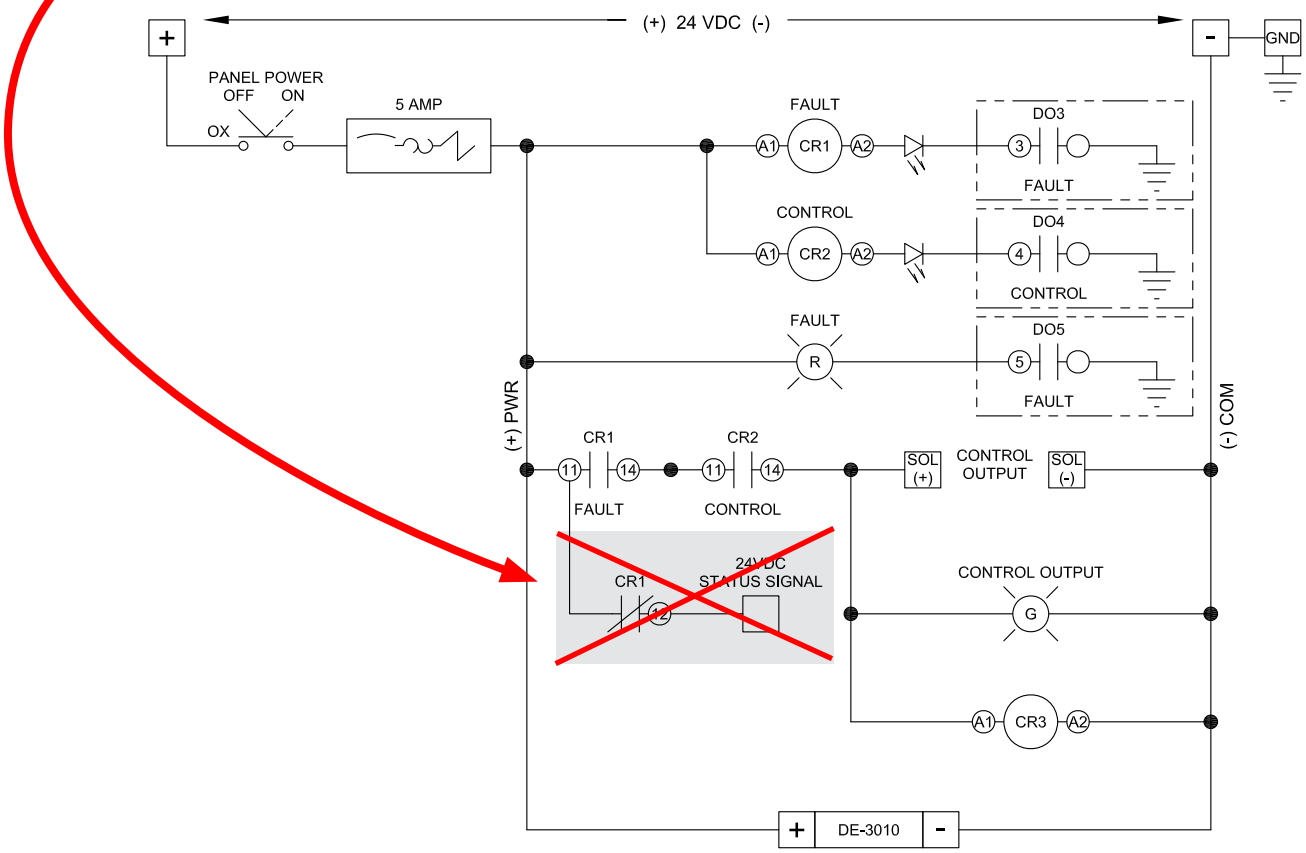
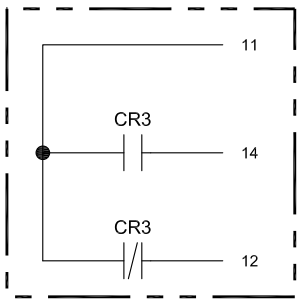
RELAY CR3 IS AN OPTIONAL
CUSTOMER CONNECTION (TYPICALLY TO A PLC)
TO DETECT GAS SUBSTITUTION